卡丽 KARAT®

安装使用说明书 INSTALLATION INSTRUCTIONS

维格一体化智能座便器305mm/400mm坑距
VOGUE INTELLIGENT
INTEGRATED TOILET305mm/400mm RI
20127T-M-WK/20128T-M-WK

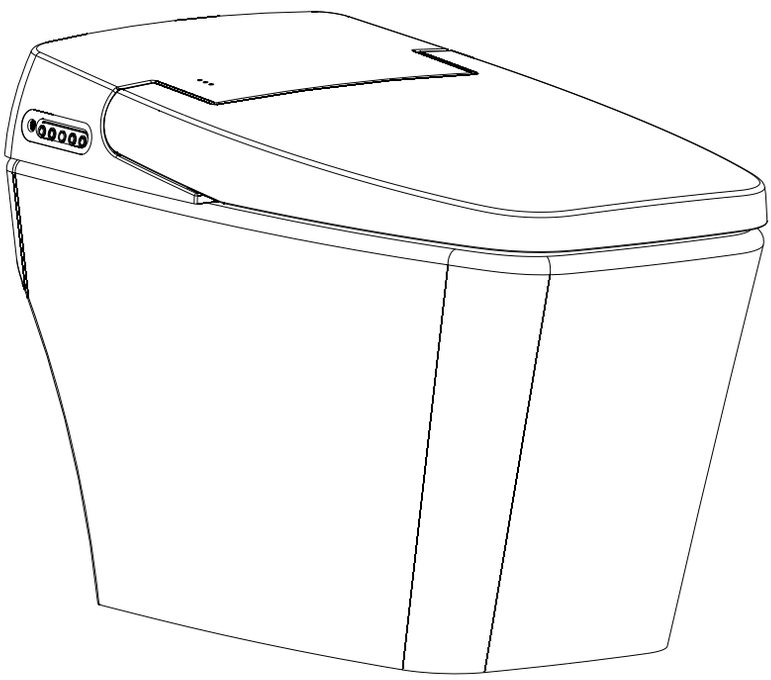

CONTENTS
目录

安装之前注意事项.....01
产品简介.....02
功　　能.....02
安全注意事项.....03
技术参数.....06
尺寸图纸.....07
配件示意图.....06
安　　装.....07
产品使用.....09
　遥控器使用.....09
　水压调节.....11
　座温设定.....10
　水温设定.....10
　节能设定.....10
　臀部清洗.....10
　女士专用.....10
　暖风功能.....11
　移动冲洗.....11
　冲洗按摩.....11
　自动冲水.....11
　小档冲洗.....11
　柔光照明.....11
　遥控操作.....11
　时钟设定.....12
　遥控器对码.....12
注意事项.....12
清洁保养.....12
故障分析和处理.....13
保修卡（顾客留存联）.....15
保修卡（公司留存联）.....16
维修零件图 17
环保说明.....18

维格一体化智能座便器305mm/400mm坑距
VOGUE INTELLIGENT
INTEGRATED TOILET305mm/400mm RI
20127T-M-WK/20128T-M-WK

BEFORE YOU BEGIN 安装之前

- Please read these instructions carefully to familiarize yourself with the required tools, materials, and installation sequences. Follow the sections that pertain to your particular installation. This will help you avoid costly mistakes. In addition to proper installation, read all operating and safety instructions.
- All information in these instructions is based upon the latest product information available at the time of publication.
- These instructions contain important care, cleaning, and warranty information-**Please leave instructions for the consumer.**
- Obey all electrical regulations in force at the time of installation.
  ⚠**Warning! Risk of personal injury and product damage.** Toilet are very heavy and should not be lifted or installed by just one person.
- 请仔细详阅本指引，以便熟悉所需工具、物料及安装程序。请遵照适用的章节来安装本产品，以免安装失当导致不必要的损失。除了有关正确的安装方法之外，还务请详阅所有操作及安全指引。
- 本指引所载之一切资料，均以印刷时所有之最新产品情况为基础。
- 本指引也包含了有关保养、清洁及担保等重要资料-**请交予用户保存。**
- 遵循当地所有的电器安装规定。
  ⚠**警告! 小心人身伤害和产品受损**。座便器较重，安装时请勿一人操作。

SAFETY: WARNINGS

Products are precision engineered and should give continued superior and safe performance, provided:
1. They are installed, commissioned, operated and maintained in accordance with the recommendations given in this Manual.
2. Periodic attention is given, as necessary, to maintain the product in good functional order. Recommended guidelines are given in the **MAINTENANCE** section.

Carefully inspect the new fixture for any signs of damage.
When installing Products, manufacturers guidelines for power tool safety should be followed.

安全：警告

产品经过精确制造，性能卓越，经久耐用。为保证产品品质，您必须：
1. 按照此手册中推荐的方法进行安装、起动、操作及维护。
2. 如有需要，定期检查，令产品保持良好性能状态。日常维护章节中列有推荐方法。

仔细检查新产品是否有损伤。
在安装产品时，必须遵循制造商有关电动工具的安全指令。

TOOLS AND MATERIALS 工具及材料

Pencil	铅笔
Measuring Tape	卷尺
Level	水平尺
Miter Box	钻子箱
Safety Glasses	安全眼镜
Drill	手枪钻
Screwdrivers	螺丝刀
Hole Saw	孔锯

INSTRUCTION

The automatic toilet seat with the functions of washing, automatic drying, seat heating, soft-close, automatically cleaning,water pressure adjustment, lambency lighting, wetting etc. The water temperature .air temperature .seat temperature can be adjusted per your requirements.

产品简介

本产品具有温水清洗、暖风、座圈加热、阻尼缓降、自动除臭、按摩清洗、水压调节、柔光照明等功能，座圈温度、清洗温度，可根据需要进行调节。使用后的污水通过座便器连接到原排污系统。

FUNCTION

Hip cleaning	Warm water wash, toilet no toilet paper,
For Lady	Designed for ms warm water wash, to meet the special needs of women, both convenient and comfortable health
Nozzle position control	Before and after hip cleaning or ms when cleaning, can adjust the nozzle position, meet the needs of the individual position, in order to clean
seat heating	Microcomputer control of seat in use can adjust temperature according to need.In the cold winter, the seat is warm
Warm air	After cleaning the heater can be used for drying, three block heater temperature is adjustable, make you feel more care, clean and bright
soft close	According to the principle of physical damping design of damping device, resulting in a seat change, can be quiet the closure of the seat, seat cover
seat on-off sensor	Present circle with the body induction switch, when the body falls on lap, to start cleaning and drying function, in order to avoid the child wrong operation cause spraying and drying.
Auto Deodorization	Machine with activated carbon deodorization device, when the body falls when using sit seat is deodorization function automatic startup, shut down automatically when they leave your worries.
Massage function	Cleaning condition using anon function, can realize rhythmic change and clean water before and after the cleaning rod for reciprocating movement. Both expand the range of cleaning, and has the massage effect your worries.

功能

臀部冲洗	便后温水清洗（使用方法参考说明书第10页）
女士专用	满足女性特殊需求（使用方法参考说明书第10页）
喷嘴位置调节	臀部清洗或女士清洗时，可前后调节清洗位置，满足个人位置需要，以便清洗更准确。（使用方法参考说明书第11页）
座圈加热	座圈在使用中可根据需要调节温度。（使用方法参考说明书第10页）
暖风	清洗后可使用暖风功能，暖风温度三档可调（使用方法参考说明书第11页）
缓降盖板	根据物理阻尼原理设计的阻尼装置，使座圈，座盖缓慢放下（使用方法参考说明书第11页）
着座开关	在座圈内设有人体感应开关，当人体落座时，清洗，暖风功能启动（使用方法参考说明书第7页, 配件示意图）
自动除臭	采用除臭滤芯，及时有效清除座便器内的臭味。（使用方法参考说明书第11页）
按摩功能	清洗状态下使用按摩功能，可实现清洗水压大小有节奏变化和清洗杆作前后往复清洗（使用方法参考说明书第11页）

Soft light lighting	Built-in micro power consumption LED lights, automatic light up at night, give you bring the toilet convenient, automatically shut down during the day
for 24hours	Water temperature, temperature Settings in medium and top grade, can open the memory section according to the key energy-saving features, water temperature, the temperature automatic transform to the low temperature, usually kept in low temperature condition, when the body falls sit seat, the goods to the original set of gear automatically
Wireless remote control	Using wireless remote control, remote control distance, omnidirectional, operation more convenient intuitive all function can use the remote control
water pressure	Internal pressure to adjust air pump, when cleaning pulse effect, and clean water pressure can be adjusted according to need
For men	Humanized function of sensor after men urinate, don't have to bend over to press the manual button on the ceramic toilet, only need to present induction to gently touch switch
Auto flush	Automatic sensor, after the warm air drying after cleaning or washing machine will automatically when you leave the seat body flush once, without manual operation. After blackout can press profile automatically flush button, also can realize automatic flush

柔光照明	内置微功能LED灯，黑暗自动照亮，给您如厕带来便利，白昼自动关闭。（使用方法参考说明书第11页）
记忆节电	水温，座温设置中，高档时，可按节电键开启记忆节电功能。无人使用时，水温，座温自动变换到最低温度档，档人体落座时，自动回到原设定的档位。（使用方法参考说明书第10页）
智能遥控	采用无线遥控器，遥控距离远，无方向性（使用方法参考说明书第09页）
清洗水压调节	内设压力调节泵，清洗时产生脉冲效果，而且清洗水压可根据需要进行调节。（使用方法参考说明书第11页）
男士清洗	男士小便后，无需弯腰按座便器上的冲洗按钮，只需在座圈顶端的感应点轻轻触碰一下即可。内设电池，停电后依然可以使用。（使用方法参考说明书第11页）
自动冲水	全自动感应冲水，清洗后暖风时或清洗后人体离开座圈时机器会自动冲洗一次。内设电池，停电后依然可以使用。（使用方法参考说明书第11页）

SAFT NOTICE

Attention please comply following safety matters to avoid injury and property loss:

■ Ignore following warnings, two kinds of damagers will be produced by wrong using methods

⚠ Warning: In violation of the warning, may cause death or serious injury.

⚠ Attention: In violation of the matters of attention, may cause damage or loss of material.

安全注意事项

为了避免对您和他人造成伤害和财产损失, 请您务必遵守如下有关安全方面的注意事项:

■ 无视如下警示, 因错误的使用方法而产生的危害分为两级

⚠ **警告：**违反警告事项时, 可能会造成人的死亡或重伤。

⚠ **注意：**违反注意事项时，可能会造成人的伤害或物质的损失。

WARNING

This product requires AC power of 220V.50Hz. To avoid damaging t he product , please confirm whether the supply power accord with the rated voltaged of toilet seat. Make surethe three core socket with reliable earthing inside.

Children should be supervised by adults to ensure that they do not play with the product. When the elderly, children, physical disabilities, persons who extreme tired, alcoholics, patients with skin diseases or skin sensitive to use, or use with long time, please bring a variety of functions transferred to the low level to avoid scalding.

Please don't use this power socket which matchs not perfectly with plug. It is forbidden that put the toilet seat and plug into water or water spray(or other liquid). To avoid electric shock or fire, please don't use it under humid environment.

To avoid electric shock, fire, water leakage and other causes, disassembly the toilet seat by yourself or require the product or reshape the product is forbidden.

Make sure the water you use is clear, to avoid health troubles,please don't put any air freshener.

It is strictly forbidden to stamp the toilet seat and seat cover. To avoid electric shock or other injury and damage, don't put heater machine or weight things onto toilet seat、seat cover、power line .

Please ensure that the source of water is clean tap water, do not use neutral water, industrial water.

May let go of the water inlet pipe when the water freezes.

Please regularly clean the dust on the power plug, clean when the power plug is pulled off, dry cloth wipe. Not a long time, please put the water out of the tank.

Please periodic inspection and cleaning machine of the warm air blower, cleaning rod around in the dirt, to avoid internal diffusion, corrosion of machine parts and caused insulation performance degradation, causing leakage phenomenon.

Do not to reverse the product to use, which damages the product.
Please don't plunge into toilet bowls with easily blocked items such as newsprint, paper diapers, and sanitary napkins.
Please do not use in environments below 0℃.
Please do not embed cementitious materials (cement mortar, etc.) on toilet seats to prevent them from swelling due to swelling.
Please do not use gravity to impact the ceramic to prevent damage.

警告

本产品要求电源为交流220V50HZ,请确保电源与本机额定电压相符，保证三芯插座内有可靠的接地，以免触电或损坏产品。

儿童不应玩耍器具，使用时应在成人监护下使用，避免儿童单独接触产品。
在老人、小孩、身体障碍者、极度疲劳者，醉酒者、皮肤病患者或皮肤敏
感者使用时，或长时间使用时应把各种功能的温度调到较低档，以免烫伤。

请勿使用插头配合松动的电源插座，请勿将本体和插头放在水里或淋水，请勿在过于潮湿的环境下使用，以免造成触电或火灾。电源出现故障时请立即拔下电源插头并联系维修人员。

严禁自行拆卸，修理或改造产品。以免造成触电，火灾，漏电或其他故障。

请确保使用的水源是干净的自来水，不可使用中水，工业水。

严禁踩踏机器本体和座盖，严禁把加热器或重物放在机器本体，座盖，电源线上，以免造成触电或其他伤害和损坏。

请确保使用的水源是干净的自来水，不可使用中水，工业水。

有可能结冰的时候请放掉进水管里的水。

请定期清洁电源插头上的灰尘，清洁时将电源插头拔下，干布擦拭。长期不用时，请将水箱里的水放掉。

请定期检查和清洗机器的暖风机清洗杆四周的污垢，以免向机内扩散，腐蚀机内部件并造成绝缘性能降低，引发漏电现象。

请勿将商品翻转使用，否则会损坏产品。

请不要向便器内冲入新闻纸、纸尿垫、妇用卫生巾等容易堵塞的物品。

请不要在0℃以下环境中使用。
请不要在便器底座埋入胶凝材料（水泥砂浆等），以防止因膨胀而撑裂便器。

请不要重力撞击陶瓷，以防止破损漏水。

CAUTION

Cigarettes and other fires should be taken away from this product.

It is strictly forbidden to stamp the product or stand on it.

Do not knock the product.

Please keep the warm-air mouth fluently.

Keep water-inlet hose not been bent and damaged.

Please use soft wet-clothing wipe the surface of toilet seat instead of any organic impregnant.

Do not take off the plug when your hand is wet.

Do not force pull the plug wire.

Please do not use this product upturn, otherwise it will be damaged.

Please take off the plug when there is thunder.

Please cut down the water supply and power supply when itis not use for long time.

Please take heater away from this product, otherwise it will deformation or color distortion.

Sunshine is not allowed !

DANGER: Risk of electric shock, disconnect power before using.

WARNING: Risk of electric shock. connect only to circuits protected by Ground-Fault Ciruit-Interrupters（GFCI）or Earth-Leakage Circuit-Breakers（ELCB）.

CAUTION: Risk of hazardous gases. if a new toilet is not installed immediately. temporarily place a rag in the floor flange opening

- **NOTICE:** Follow all local plumbing and electrical codes
- **NOTICE:** Receptacles installed in bathroom to be located at least1 meter from a bathtub or shower if practical.
- Obaserve all local plumbing and building codes.
- Carefully inspect the new toilet for damage
- Water and electrical supplies may be wall mounted
- There is a wiring schematic on the inside of the junction Box cover

WARNING: risk of electric shock for hardwire install
ations/through-floor electrical supply connect only to properly -rounded,dedicated220V/50Hz circuit protected by a class A Ground-Fault Ciruit-Interrupters（GFCI）or Earth-Leakage Circuit-Breakers（ELCB）.

WARING:must use 10A receptacle

注意

请勿将香烟等火种接近产品。

请勿站人及将重物放在产品上。

请勿撞击产品。

请勿用手指或其他物品堵塞暖风口。

请勿将进水管扭曲破损。

请用清洁的湿布擦亮外壳，不要使用任何有机溶剂。

不要用湿手拔插电源。

请勿拉扯电源插头

请勿将产品翻转使用，否则会损坏产品。

在打雷时请将电源插头拔掉。

长期不用时，请将水，电路切断，并放掉水箱里面的水。

请不要把取暖器或壁炉等产品靠近本体，否则会导致本体变形，变色。

防止日光直接照射，否则会引起产品变色。

危险：存在触电危险。操作前应切断电源。

警告：存在触电危险。只可连接至带接地故障断路器（GFCI）或接地漏电断路器（ELCB）保护的电路中。

谨慎：存在有害气体的危险。如果新座便器不能立即安装，可在地面法兰孔上临时遮盖一块旧布。

- **注意**：遵守本地所有的管道和电器规程
- **注意**：安装在浴室内的插座位置距离浴缸或淋浴喷头至少应为一米。
- 蹲守所有的本地管道安装规程和建筑规范
- 仔细检查新座便器有无损坏
- 电源盒水管应采用墙式安装方式。

警告：产品存在电击的危险。本产品只可连接到良好接地，电源要求交流220V/50Hz电路，必须带接地故障断路器或接地漏电断路器。

警告：必须使用不小于10A插座
最好使用防水插座

SPECIFICATIONS 技术参数

Model	20127T-M-WK/20128T-M-WK
Voltage	~220V/50HZ
Rated input power	720W
Maximum input power	850W
Length of supply cord	1.5M
Safty device	leakage protection 10mA
Ingress Protection	IPX4
Water Pressure	0.12-0.75mpa
Water Temperature	1℃~40℃
Dimension	690×424×493mm
Body weight	44.5kg
Washing settings	
Rinse rate	0.6~1.1L/min
Heater power	600W
Water temperature	Room temperature to 40°c
Safety device	Dual control water temperature Anti-dry protection
Air drying settings	
Max.power	190W
Air temperature	Room temperature to 60°c
safety device	Dual Temperature fuse protection: 95°c~150°c
Seat	
Seat heater power	45W
Seat temperature	Room temperature to 40°c
Open-close device	Damping system
Safety device	Temperature fuse 77°c

型号	20127T-M-WK/20128T-M-WK
额定电压	~220V/50HZ
额定功率	720W
最大功率	850W
电源线长度	1.5m
安全装置	漏电保护动作电流10mA
防水等级	IPX4
适用水压	0.12~0.75MPa
适用温度	1℃~40℃
外形尺寸	690×424×493mm
本体重量	44.5kg
洗净装置	
冲洗水量	0.6~1.1L/min
温水加热功率	600W
冲洗水温	四档调节(常温～约40℃)
安全装置	水温传感控制，45℃和50℃温度开关保护，电热管防干烧保护。
暖风装置	
电热最大功率	190W
温风调节	室温～60°c
安全装置	双重热保护:95℃/150℃
暖座装置	
电热功率	45W
座圈温度	四档调节(常温～约40℃)
阻尼装置	带缓降阻尼
安全装置	电热保护77℃

水效表

型号 / 水效	水效等级	平均用水量（L）	全冲用水量（L）	半冲用水量（L）
20127T-M-WK	2级	4.6	5.8	4.0
20128T-M-WK	2级	4.6	5.8	4.0

注* 水效等级划分标准：
1级—平均用水量≤4. 0L,且双冲坐便器全冲用水量≤5. 0L
2级—4. 0L<平均用水量≤5. 0L,且双冲坐便器5. 0L<全冲用水量≤6. 0L
3级—5. 0L<平均用水量≤6. 4L,且双冲坐便器6. 0L<全冲用水量≤8. 0L

ROUGHING 尺寸图

Unit:mm
单位:mm

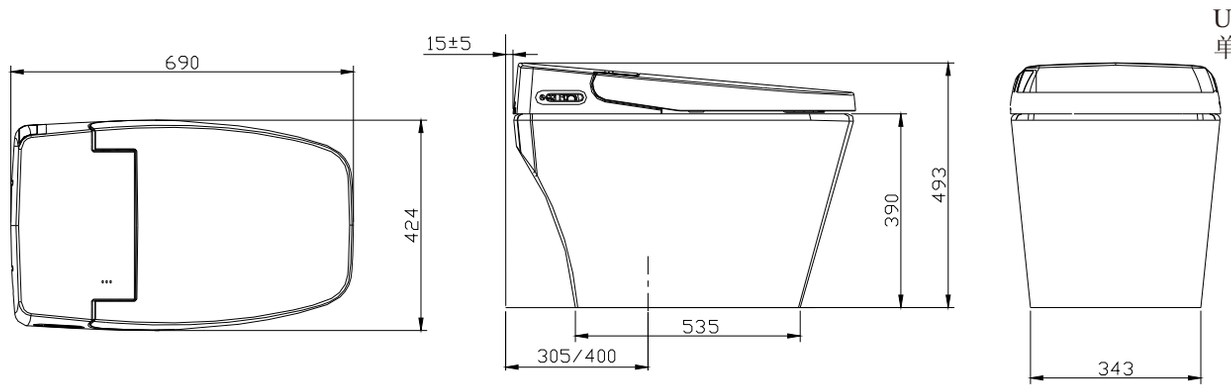

*The size is for reference only, please check the actual size before installation.

*此尺寸仅供参考，安装前请仔细测量实际产品。

OVERALL SKETCH 配件示意图

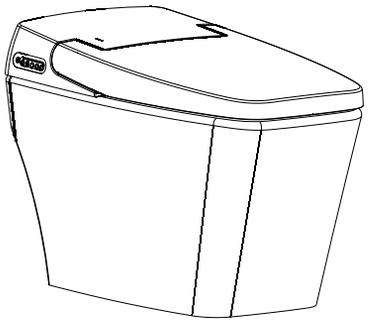

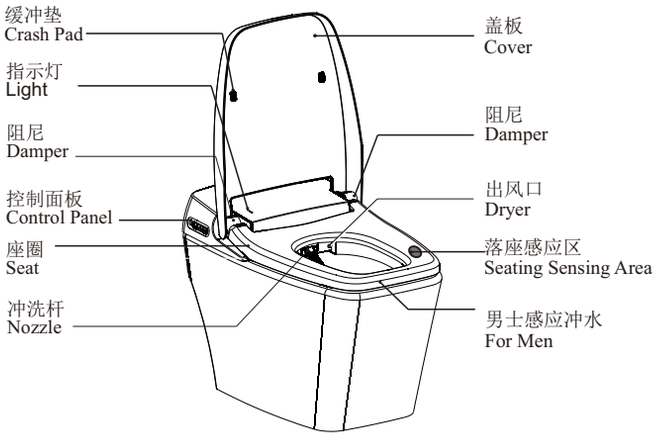

BATTERY 电池安装

1.5V dry battery ×4
Matters needing attention
1)Do not put the battery into a fire or heat the battery
2)Do not positive and negative reverse connection of battery
For dry battery
When replacing the battery, do not reverse the battery positive and negative. Please follow the instruction

4节1.5V干电池
注意事项
1）严禁将电池放入水中或加热电池
2）禁止将电池正负极反接
使用干电池的产品
当您更换电池时，请勿反接电源正负极，请按说明书操作

INSTALLATION 安装

1,Draw a cross-shaped line between the floor hose and the toilet seat' limber hole

NOTE:
1) To assort with the limber hole of the toilet seat,the drainpipe should be 5~15mm higher than the floor.
2) Installed with high coagulated material(grout) is strictly forbidden. As the cement's swell may damage the bottom of the toilet seat. Our company is not responsible for such damage.
3) The distance between the center of the drainpipe and the wall is 305mm/400mm.

1,在地面水管和坐便器排污口划好十字中心线。

注意：
1）排水管应高出地面5~15mm以便座便器排污口良好配合。
2）本产品禁止用高凝材料（水泥砂浆）安装，因为水泥膨胀可能挤破座便器底部。我公司因水泥安装而导致座便器破裂恕不负责。

3）排水管的中心离墙壁为305mm/400mm。

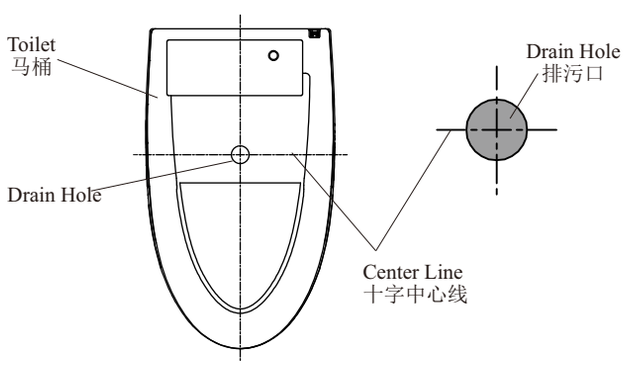

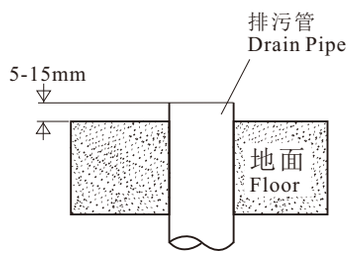

2.Fetch the sundries out of the drainpipe, make sure the pipe is fluent totally. Then put up the seat to make sure the cross-shaped line consistant with the floor, be sure that center or the pipe is accordance with the center point of the drainage. Pull it down to tight it till the toilet seat is firmly installed.

NOTE:
After firming the toilet seat, no lifting or shaking any more. If the waterproof function of the sealing washer is damaged, please replace it with a new one.

2,将排水管的堵物取出，确保排水管干净。然后抬起座便器，安装密封圈(法兰)，使座便器的十字中心线与地面上的对齐，确保排污品中心与排水管中心对正，然后向下压紧，直至座便器平稳。在座便器的四周打上硅胶。

注意：
放好坐便器后，不可再提起或摇晃；若密封圈的防水攻能受到破坏，必须更换新的封圈。

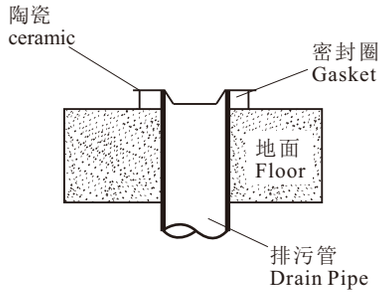

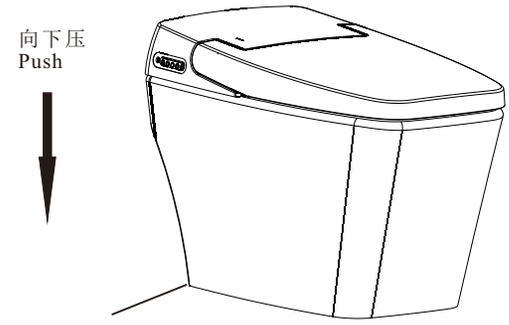

3,Turn off the water supply valve, removed the original angle valve, install the angle valve (supplied) (you must use the angle valve and hose supplied with toilet, otherwise it will cause lack of flushing) then filter is mounted to the angle valve, and then install the filter switch, switch and PE pipe vertical to the closed state) open filter switch.
As shown, the stainless steel water pipe is connected to the filter.

NOTE:
Each connection must be sealed with a washer, no bending pipe, tighten nut, avoid leakage.

Install the water inlet angle valve,connect the water pipe,water inlet hose and filter .Then turn on to check if there is leaking phenomenon.If everything is in normal,put the sealing glue between the toilet seat and floor.

3, 关闭自来水总阀，拆掉原来的角阀和软管，安装专用角阀和软管（**必须使用自带的角阀和软管，不要使用旧管，否则会引起漏水风险**）然后将过滤器安装到角阀上，再安装过滤器开关，（开关与PE管垂直为关闭状态）打开过滤器开关

如图，将不锈钢水管连接到过滤器上。

注意:
各连接处必须用密封垫圈密封, 禁止折弯水管, 螺帽适度拧紧, 以免漏水。

安装供水管角向阀，连接水管，进水软管和过滤器，并开启检查连接点是否有漏水现像，在一切正常的情况下，在座便器与地面接触面上打上密封胶。

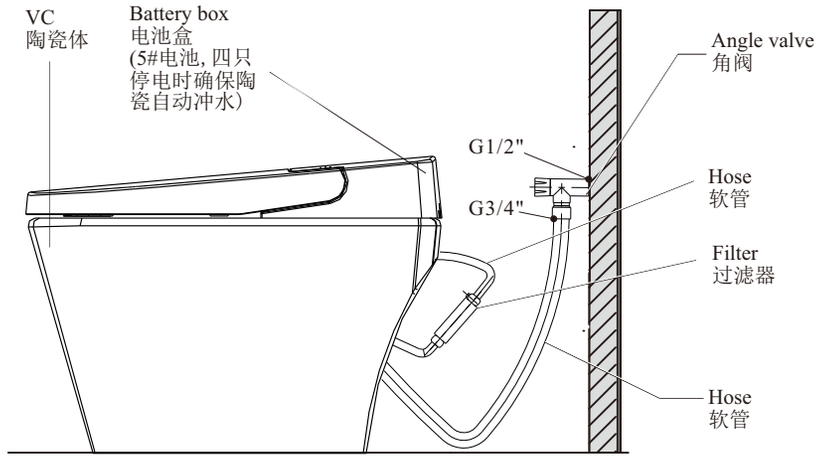

4, Filter replacement
Filter can filter out water extremely small particles, suspended matter, colloid and Harmonia, peculiar smell. In ensuring the healthy water , greatly reducing mechanical failure, lengthen the service life of machines.

when you using machines, If you found no hot water, water pressure is low, over the filter membrane yellow ,It's time to replace the filter.

Replacement procedure:

1, turn off the valve
2, remove the inlet pipe
3, remove the PE pipe junction blue buckle, push card ring, pull out the PE
4, remove the filter
5, install the new filter
6,turn on the valve, check for leaks

4, 过滤器的更换
过滤器能过滤掉自来水中极细小的颗粒, 悬浮物, 胶体和一定的异色, 异味. 在保证环保用水的同时, 大大降低机械故障，加长机器使用年限。

过滤器的使用周期根据水质的实际情况而定, 在使用时, 发现清洗无热水, 水压偏低, 过滤器内的膜发黄, 需要更换过滤器。

更换步骤：

1, 关闭角阀
2, 拆掉进水管
3, 拆掉PE管连接处的蓝色卡扣, 推进卡环, 拉出PE管

4, 拆掉过滤器
5, 换上新过滤器
6, 打来角阀, 检查是否漏水

HOW TO USE 产品使用

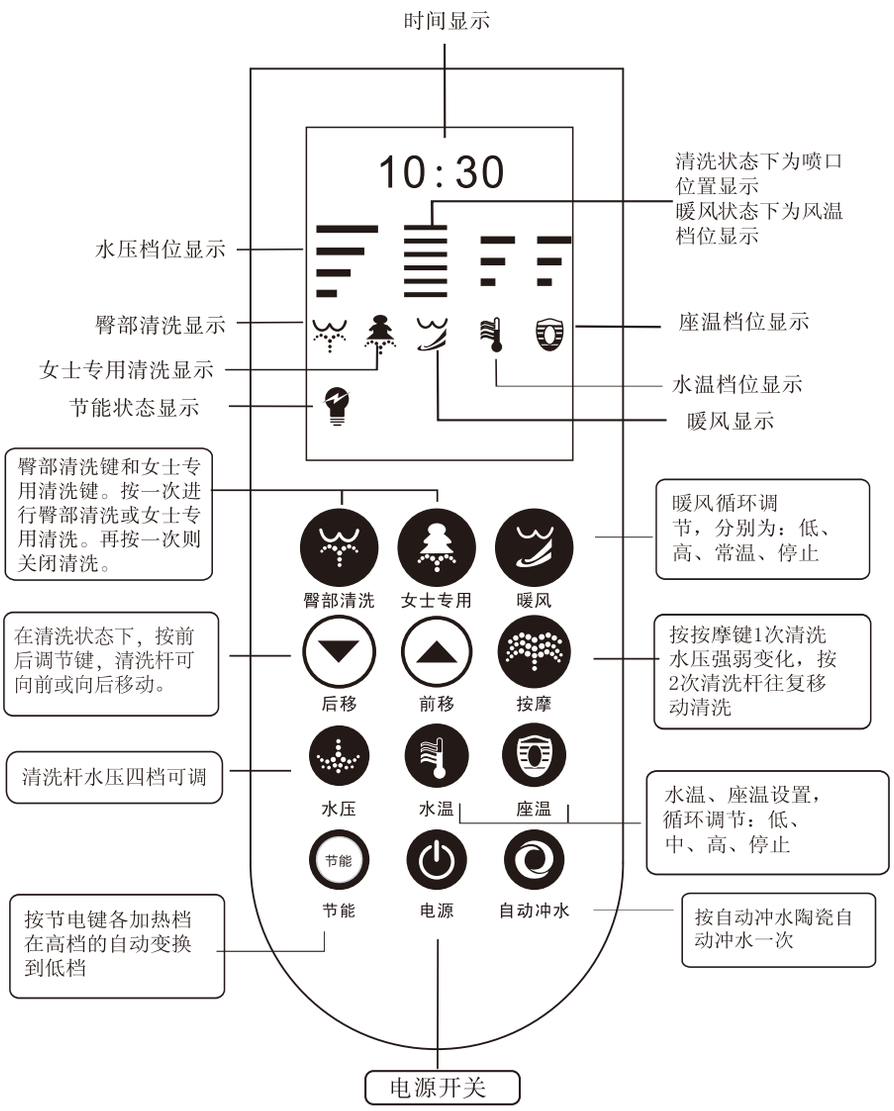

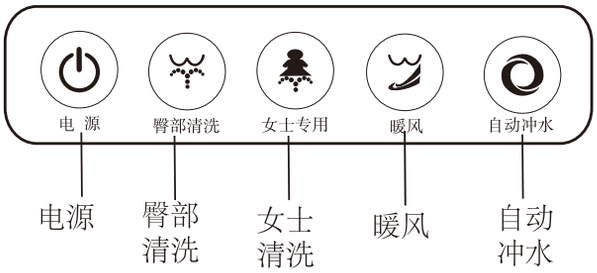

1, Setting
Through the control panel to complete the set, just one time setting when you open the mache. If you need to change the settings, you can adjust the settings again.
When the power is cut off, all of the setting will restore the factory settings.

1, 使用前设定
通过操作按键完成设定,开机后只需设定一次。如需改变设定，重新调节即可。

当切断电源重启时，设置的功能全部恢复出厂设置。

座温	The seat temperature can be adjusted according to your requirement: close(normal temperature), low(34°C), medium(37°C), high(40°C).	座温	按遥控器“座温”键可设定座圈温度。座圈温度分为四档循环：低温（34℃）、中温（37℃）、高温（40℃）、常温（常温），开机默认中温。
水温	The water temperature can be adjusted according to your requirement: close(normal temperature), low(34°C,light color is green), medium (38°C,light color is orange), high(40°C,light color is red).	水温	按遥控器“水温”键可设定冲洗水温。水温设置分为四档循环：低温（34℃,工作只是灯绿色）、中温（37℃,工作指示灯橙色）、高温（40℃,工作指示灯红色）、常温（常温无指示灯）。
节能	When seat is not sense the body, press the "energy" key, energy saving function starts. If the water temperature, the temperature is set in the middle or high temperature profile, this time will automatically switch to the low temperature file. Energy saving function is turned on, the water temperature, the temperature of the button does not work. And then press the button once again, and the energy is closed. Water temperature, the temperature automatically back to the original set of gear. When seat is sense the human body, the energy saving function opens, the water temperature, seat temperature is the original set. When seat is not sense the body, automatically enter the energy saving mode.	节能	当着座未感应时，按“节能”键,节能功能启动。如果水温,座温设定在中温档或者高温档,此时会自动转换到低温档。节能功能开启时，水温，座温按键不工作。再按一次节能按键，节能关闭。水温，座温自动回到原来设定的档位。 当着座感应时，节能功能开启后,水温，座温为原设定时的档位，无着座感应时，自动进入节能模式。

2, Function

2, 基本功能

臀部清洗	Use the remote control or the host "hip cleaning" key for hip cleaning, and then once again to stop. A cleaning time is 30 minutes and 1 seconds. During the cleaning process, the "hip cleaning" key and " for Lady" key can be transform to each other. During the process of the expansion, the flushing rod is leaking out of the water flow, which is used for cleaning the spray head.	臀部清洗	按遥控器或主机“臀部清洗”键进行臀部清洗，再按一次停止。一次清洗的时间是1分30秒。清洗过程中，“臀部清洗”键与“女士专用”键可以互相转换，转换时间约4秒。清洗时，冲洗杆在伸缩过程中有水流渗出，用来清洗喷头，属正常现象。座圈感应器检测无人着座时，清洗和暖风不能启动。
女士专用	Use the remote control or the host "for lady" key for hip cleaning, and then once again to stop. A cleaning time is 30 minutes and 1 seconds. During the cleaning process, the “for Lady" key and “hip cleaning" key can be transform to each other. During the process of the expansion, the flushing rod is leaking out of the water flow, which is used for cleaning the spray head.	女士专用	按遥控器或主机“女士专用”键进行女士清洗，再按一次停止。一次清洗的时间是1分30秒。清洗过程中，“女士专用”键与“臀部清洗”键可以互相转换。冲洗杆在伸缩过程中有水流渗出，用来清洗喷头，属正常现象。座圈感应器检测无人着座时，清洗和暖风不能启动。

水压

The water pressure can be adjusted according to push the “water pressure” Water pressure is high, high-to-medium , medium and low .

水压

清洗时循环按“水压”键对水压大小进行调节。水压分高、中高，中、低四档。

暖风

The dry temperature can be adjusted according to your requirement: low, medium, high and close. A drying time is 30 minutes and 2 seconds.

暖风

暖风温度分为低、高、常温三档和关闭。暖风可根据舒适度调节到相应档位。一次的暖风功能时间约2分30秒。

喷口位置

When clean, press "forward" button, can make the vent position forward. Press the "back" button, can make the vent position sink down.

喷口位置

在清洗时，按“前移”键，可以使喷口位置前移，可调节五个级别。按“后移”键，可以使喷口位置后移，可调节五个级别。

按 摩

Hip cleaning or the state of the ladies clean, press "massage" key, Clean the water pressure will change, and then press a "massage" key, the cleaning rod will move before and after cleaning. Press a "massage" key again, withdraw from the massage function.

按 摩

臀部清洗或女士专用的状态下, 按“按摩”键, 清洗的水压会变化, 再按一次“按摩”键, 清洗杆会前后移动清洗。再按一次“按摩”键, 退出按摩功能。

自动
冲水

When cleaning after completion, press the "auto flush" button, the toilet will be automatically flush.

自动
冲水

按机器或遥控器上的“自动冲水”键，座便器会自动进行冲水一次。如果没有按“自动冲水”键，则暖风的同时自动冲水一次。清洗后不按暖风键起身，马桶也会进行自动冲水。注意:要实现自动冲水功能，必须要先打开自动冲水功能键。

男

感应
冲水

Touch the top of the induction point of the seat (0.5 seconds) toilet flush.

男

感应
冲水

手触摸座圈顶端的感应点（0. 5秒以上）马桶小档冲洗一次。

2, Function

soft close
According to the principle of physical damping design of damping device, resulting in a seat change, can be quiet the closure of the seat, seat cover.

2, 其他功能

静音防撞
根据物理阻尼原理设计的缓冲装置，可安静的关闭座圈，座盖。

lighting
Built-in micro power consumption LED lights, automatic light up at night, give you bring the toilet convenient, automatically shut down during the day

柔光照明
此功能不需要按键操作，根据室内光线的强弱自动识别是否开启功能，光线暗时开启，光线亮时关闭。

Wireless remote control
Using wireless remote control, remote control distance, omnidirectional, operation more convenient intuitive all function can use the remote control

遥控操作
注意：清洗、暖风和自动冲水功能需人体落座后才能使用。在遥控器的日常使用中，应避免与水接触，防止损坏。请定期更换电池。

Auto Deodorization
Machine with activated carbon deodorization device, when the body falls when using sit seat is deodorization function automatic startup, shut down automatically when they leave your worries.

自动除臭
入座后着座开关启动，除臭功能开启直到人离开后40秒，除臭功能停止。

Clock setting
In unwashed state, press and hold the power button 3 seconds to enter the clock setting mode, the clock display flickered, then press forward hour set, press shift minute set. Set up after the completion of the power 3 seconds to exit the settings.

时钟设置
在未清洗的状态下,按住电源键3秒进入时钟设置模式，时钟显示开始闪烁，此时按前移进行小时设置，按后移进行分钟设置。设置完成后按电源3秒退出设置。

coding remoter
before you buy the product, remote control has been completed on the product code, can be used directly. If the remote control does not operate, it should be re - coding . turn off the power , 30 seconds after turn on the power, press the cleaning or hip cleaning key always, 5 seconds after the machine continuous issued a "beep, beep sound, loose switch, then continuously press the remote control power supply button of the code. the code is completed, according to the remote control power button can control the host indicating lamp is turned on and off after the code is completed, the remote control can only be used with the host one to one.

遥控对码
产品出厂时，遥控器已于产品完成对码，可以直接使用。如遥控器不能操作则应该重新对码。拔掉主机电源，30秒后重新插上，按主机上的电源键开机后,按住女士专用或臀部清洗键不放，5秒后机器连续发出“嘀、嘀”声松掉开关，这时连续按遥控器电源键即可对码。（对码完成后，按遥控器电源键可控制主机指示灯开启和关闭）
对码完成后，遥控器只能和主机一对一使用。

Remote controller installation
Clean the wall and keep it dry. Tear off the film of the bracket adhesive . install the bracket, not sticking down again. put the remote control in the bracket after 24 hours.

遥控器安装方法
将墙面擦洗干净，并保持干燥。撕下挂件后面的不干胶膜。将挂件黏在安装位置，黏上以后不能再取下来。24小时后将遥控器放在挂件上。

NOTICE

1.Before using please check the earthing device on the power socket which is connected with the power plug of the toilet seat ,the socket shall be reliably earthed.
2.The products require AC power of 220V rate voltage,50HZ frequency.
3.Trampling or striking the products is strictly forbidden.
4.Set the products far away from the fire source,and spraying the water on it is also strictly forbidden.
5.Children can use this product only with the adults' care and avoid them touching the products alone.
6.Forbid turning off the products with wet hands,and heavy stress on the products is strictly forbidden too.
7.Please pull off the plug if no use the products for long time. Meanwhile,discharge all the water from the tank to avoid freezing in winter.
8.In case of any abnormality,stop using immediately.Pull off the plug and call the professional techinicans to repair.
9.If you want to stand up during the washing,please press the corresponding button(general washing or women washing)to stop before you stand up.Please timely clean the nozzle to keep cleaning and water fluent.

注意事项

1.使用前应检查与本便座插头连接的电源插座应可靠接地。

2.产品使用额定电压为220V，频率50HZ的交流电源。
3.产品严禁人员踩踏或重物撞击。
4.产品远离火源，严禁向产品注水及汽油和化学溶剂擦洗塑料件表面。
5.儿童应在成人监护下使用，避免让儿童单独接触产品。
6.请勿用湿手插拔电源插头或用力拉扯电源线。

7.长期不用时，应将电源插头从插座上拔下。同时放出水箱中的水，以防冬天结冰。

8.产品出现故障应立即停止使用，取下电源插头，由维修部或专业人员修理。

9.在冲洗过程中若要站起来，应按相应的冲洗键（“臀部清洗”或“女士专用”键），待停止后再站起。应定时对冲洗杆进行擦洗，保持冲洗杆的清洁和出水口的流畅。

MAINTENANCE

attention point before the Maintenance
Please make sure that the power plug has been pulled out
Do not make water in the maintenance process to enter the inside of the product
Check the power plug
Power plug is easy to cause accident, please be sure to check (once a month)
Check that the plug and the socket are in good contact and keep the plug and socket clean.

清洁保养

保养前的注意点
请确定已拔掉电源插头
保养过程中切勿令水进入产品内部

电源插头的检查
电源插头容易引发事故，请务必进行检查（一个月一次）
检查插头与插座是否接触良好，保持插头插座清洁干净。
按漏电保护器实验键，复位按钮应立即跳闸切断电

According to the leakage protective device experimental key, the reset button should immediately cut off the power supply, press the reset button to restore the power supply.

源，按复位键可恢复供电。

inspection and cleaning machine Regulary

Please regularly check and clean the dirt around the warm air inlet and the cleaning rod, so as to avoid the diffusion inside the machine, the internal parts of the corrosion machine and reduce the insulation, causing leakage phenomenon.

定期检查和清洁机器

请定期检查和清洗暖风口及清洗杆四周的污垢，以免向机内扩散，腐蚀机内部件并造成绝缘性降低，引发漏电现象。

Cleaning and maintenance of toilet seat

Wipe with warm soft fill, the twist dry soft cloth to wipe after drenching. Please use a neutral detergent to clean up in a timely manner seat of dirt, if not promptly clean up the dirt will dry on the surface, it is difficult to clean up.

便座的清洁保养

用温润柔软的补擦拭，需将软布侵湿后拧干，才可擦拭。请使用中性洗涤剂及时清理座便器上的污垢，如果不能及时清理，污垢会干结在座便器表面，难以清理。

Ceramic parts maintenance

Please do not use hot water to clean, may cause the toilet damage

Please do not use acid detergent, disinfectant to clean the toilet

Please use neutral detergent to clean the toilet.

陶瓷部分保养

请不要使用热水进行清洗，可能导致座便器的损坏

请不要使用酸性洗涤剂、消毒剂清洗座便器

请使用中性洗涤剂对座便器进行清洗

When not in use for a long time, please clean the water in the toilet and the hose.

Please be sure to cut off water and power supply

After a period of time, according to the water quality, regular inspection of the filter, such as has been yellow will need to be replaced, otherwise it will cause the cleaning water is not hot or clean water pressure.

长期不用时, 请将马桶内部及软管里的水放干净。

放水时请务必切断水路和电源

用过一段时间后，根据水质情况，定期检查过滤器，如已经发黄就需要更换，否则会引起清洗水不热或清洗水压不足。

TROUBLE SHOOTING 故障分析和处理

现象	原因	处理
电源不通	插座上没有通电或插头没有插到位	检查插座是否通电，插头是否插到位
喷不出水	自来水水压过低	提高水压或调整减压阀
	过滤器堵塞	更换过滤器
	喷杆小孔堵塞	清洗喷杆
冲洗水温不良	自来水水压不足或过滤器堵塞	检查水压，清洗过滤器
喷头漏水	机内进水阀进入杂质	清洗或更换电磁阀
座圈不暖	座温调节在低温档或在节能状态	重新调节
本体松动	固定螺丝松动	重新拧紧
遥控器失灵	电池电量不足	更换电池

	cause	solution
no power	socket no power or the plug loose	check the socket power or if the plug match socket
non water for spraying	the outside tap water-pressure is too lower	check if the supply water-pressure match toilet seat
	water-inlet filter block	cleaning or replace filter
	the spray pole block	cleaning spray pole
seat non-warm	the keystoke of seat temperature or the inside apparatus parts badly touch	adjustment
body loose	install screw loose	tight the screw
Remote controller no work	no power	replace battery

THREE-YEARS WARRANTY

This product is warranted for three years from date of purchase. Our company will be responsible for any problems caused by manufacturing defects provided with the invoice. Our company will,at its election, repair, replace or make appropriate adjustment where our company inspection discloses any such defects occurring in normal usage within one year after purchase.

The warranty, including products, is limited clearly. Our company is not responsible for other damages appeared after the warranty. Also,the warranty dose not cover problems arising from labor charges,incorrect use and installation.

三年有限担保

本产品自购买之日起，对正常使用下的制造和质料上的瑕疵提供三年的质量担保。在质保期内，凭购货发票，我司将免费承担有制造质量引起的任何问题。经核查后，我司有权决定是修理，更换，还是做适当的调整。

这里的担保，包括产品都已明确地限制在该担保期内。我司对以后出现的损坏不负有任何责任。担保也不包括外观损伤，使用不当及未按说明书安装的损失。

Shanghai Kohler International Trade Co., Ltd.
Address: Room 324, 2 Xinlin Rd,
Waigaoqiao Free Trade Zone, Shanghai
Tel: 400-920-8262
Postcode: 200131

上海科勒国际贸易有限公司
地址：上海市外高桥保税区新灵路106号2号楼324室
电话：400-920-8262
邮编：200131

保修卡（顾客留存联）

机型				序号	
售机日期		安装日期		发票号	

最终用户信息					
联系人		联系电话		邮编	
联系地址					
经销商信息					
经销商				电话	
地址				邮编	
（经销商盖章方能生效）				注：此证为保修凭证，请妥善保管	

维修记录	由维修人员填写				
第一次送修日		交付日			
损坏情况，原因，处理情况					

第一次送修日		交付日	
损坏情况，原因，处理情况			

保修卡（公司留存联）

机型				序号	
售机日期		安装日期		发票号	

最终用户信息					
联系人		联系电话		邮编	
联系地址					
经销商信息					
经销商				电话	
地址				邮编	

（经销商盖章方能生效）　　注：此证为保修凭证，请妥善保管

安装记录	由安装人员填写				
安装日期		安装人员签字			
安装记录					
配件名称					
费用合计					
产品安装完成，使用状态良好 **客户签字：**					

注：填写完成请回传总公司

维格一体化智能座便器305mm/400mm坑距
VOGUE INTELLIGENT INTEGRATED TOILET305mm/400mm RI
20127T-M-WK/20128T-M-WK

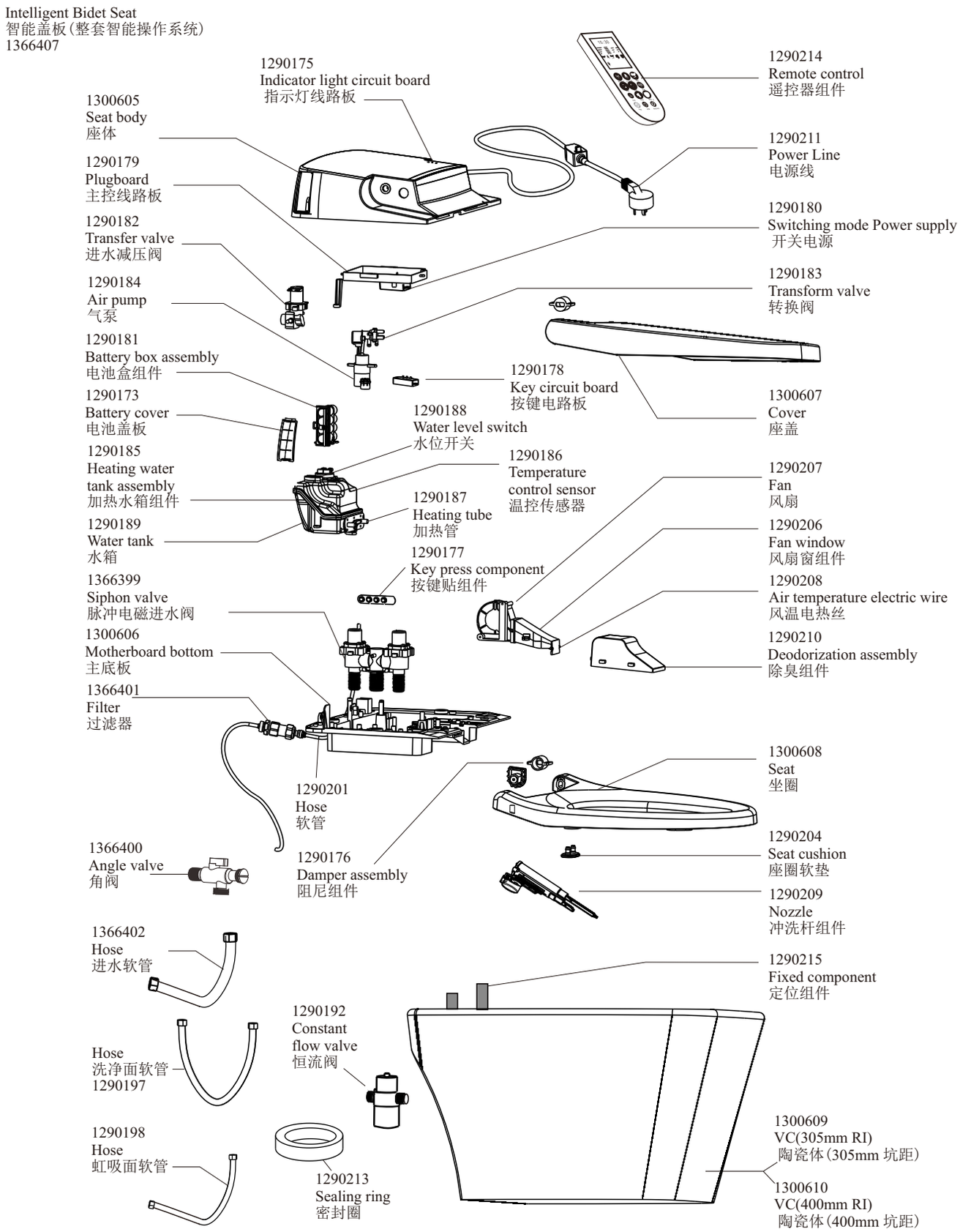

- This product meet the use and management of The《electric and electronic products hazardous substances restricted use management method》
- In the environmental protection use period, consumers will not appear in the process of normal use of hazardous substances affect consumers' health problems such as leakage, precipitation, can be at ease use
- This company product environmental protection use period for 10 years, only mentioned in this specification and normally use this product is "environmental protection use period”

Product name and content of the harmful substances							
	Hazardous substances						
part name	Pb	Hg	Cd	Cr(VI)	PBB	PBDE	Remarks
plastic parts	○	○	○	○	○	×	
The heating component	○	○	○	○	○	○	
conversion valve	○	○	○	○	○	○	
control panel	×	○	○	○	○	○	
draught Fan	○	○	○	○	○	○	
electrical machine	○	○	○	○	○	○	
Flush lever	○	○	○	○	○	○	
calorifier	○	○	○	○	○	○	
Electric leakage protection plug	○	○	○	○	○	×	
solenoid valve	×	○	○	○	○	○	
lead kit	○	○	○	○	○	○	
remote controlair	○	○	○	○	○	○	
pump	○	○	○	○	○	○	

This form is based on the provisions of SJ/T 11364

○ Said that the content of harmful substances in the parts all homogeneous materials are in the provisions of GB/T 26574 limited for the following

× Said the harmful substances in the parts of at least one homogeneous material in levels exceeding limit requirements of the provisions of GB/T 26574

Note：Above marked with "x" widget, part contains harmful material exceeds bid is due to the limitation of current industry technology level, temporarily unable to realize alternative or recycled

环保说明

- 本产品满足《电器电子产品有害物质限制使用管理办法》的要求。
- 在环保使用期限内，消费者在正常使用过程中不会出现有害物质泄漏、析出等影响消费者健康的问题，可以放心使用。
- 本公司产品环保使用期限为10年，只有在本说明书所述的正常情况下使用本产品时，“环保使用期限”才有效。 10

产品中有害物质的名称及含量

部件名称	有害物质						
	铅 (Pb)	汞 (Hg)	镉 (Cd)	六价铬 Cr（VI）	多溴联苯 (PBB)	多溴二苯醚 (PBDE)	备注
塑料件	○	○	○	○	○	×	
加热组件	○	○	○	○	○	○	
转换阀	○	○	○	○	○	○	
控制板	×	○	○	○	○	○	
风机	○	○	○	○	○	○	
电机	○	○	○	○	○	○	
冲洗杆	○	○	○	○	○	○	
温水箱/加热器	○	○	○	○	○	○	
漏电保护插	○	○	○	○	○	×	
电磁阀	×	○	○	○	○	○	
导线组件	○	○	○	○	○	○	
遥控器	○	○	○	○	○	○	
气泵	○	○	○	○	○	○	

本表格依据SJ/T　11364的规定编制
○：表示该有害物质在该部件所有均质材料中的含量均在GB/T 26572规定的限量要求以下
×：表示该有害物质在该部件的某一均质材料中的含量超出GB/T 26572规定的限量要求
备注：以上标“×”的部件中，部分含有有害物质超标是由于目前行业技术水平所限，暂时无法实现替代或减量化。

卡丽官方微信

卡丽新浪官方微博

科勒旗下　时尚卫浴

上海科勒国际贸易有限公司
地址：上海市外高桥保税区新灵路106号2号楼324室
电话：400-920-8262
邮编：200131

www.karatcn.com