卡丽 KARAT®

安装说明书 INSTALLATION INSTRUCTIONS

OPAL 3/6L ONE-PIECE TOILET 305MMRI
WITH SLOW-CLOSE SEAT & COVER
欧佩3/6升连体座便器305mm坑距
配缓降盖板
12483T-S-WK

BEFORE YOU BEGIN 安装之前

Please read these instructions carefully to familiarize yourself with the required tools, materials, and installation sequences. Follow the sections that pertain to your particular installation. This will help you avoid costly mistakes. In addition to proper installation, read all operation and safety instructions.
All information in these instructions is based upon the latest product information available at the time of publication.

请仔细阅读说明书，熟悉所需工具、材料和安装顺序。参照相关章节完成您所需的安装，以避免昂贵的损失。除了正确的安装外，请详阅所有的操作和安全说明。
本说明书所含的一切资料均以印刷时所有的最新产品为准。

TOOLS AND MATERIALS REQUIRED

(Not Supplied)
* 254 mm (10") adjustable wrench
* 305 mm (12") pipe wrench
* Tape Measure
* Level
* Drill (10mm. Drill bit)
* Screwdriver
* Gasket flange (Don't Supplied)
* Toilet installation bolt set (Supplied)
* Shut-off valve 1/2"
* Water supply flexible hose.

所需工具及材料

(不随货供应)
* 254毫米活动板钳
* 305毫米喉管板钳
* 卷尺
* 水平尺
* 电钻(钻头直径10mm或更大)
* 螺丝刀
* 密封法兰 (不提供)
* 座便器安装螺栓(已提供)
* 1/2英寸座便器止水阀
* 供水软管。

ROUGH-IN 尺寸图
单位：毫米

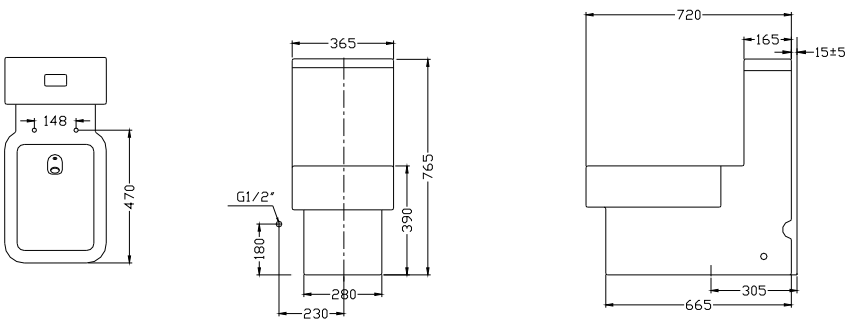

TO INSTALL SUPPLY SHUT-OFF VALVE

Install the supply shut-off valve so it is 180 mm above the finished floor line, and 230 mm to the left of the closet flange centerline. Install the supply shut-off valve with the outlet vertical.

安装止水阀

止水阀的安装位置应该在完工地面上方180毫米，在座便器法兰盘中线左侧230毫米。安装止水阀时出水口应垂直。

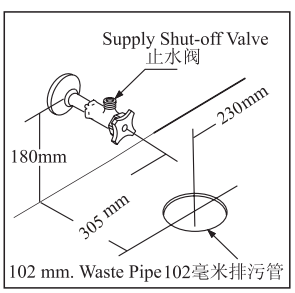

TO INSTALL TOILET

* Position the toilet so that the connector is inserted into the waste pipe.
* Mark the center of each anchoring hole on the floor.
* Remove the toilet from the area.
* Drill holes at the marks on the floor.

安装座便器

* 放好座便器的位置，确保联结件插入排污管。
* 在地板上标出每个定位孔的中心位置。
* 移开座便器。
* 在标记处钻孔。

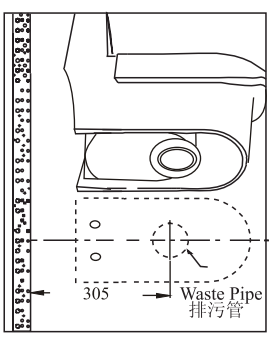

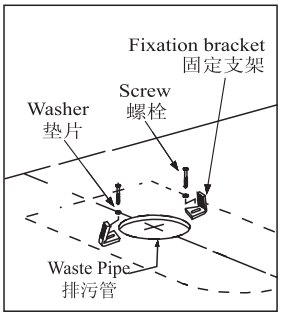

* Insert plastic sleeve of the anchoring bolts into the holes.
* Fixing the fixation bracket on the floor with washer & screw.

* 将定位螺栓的塑料套管插入钻孔中。
* 将固定支架固定到地板上。

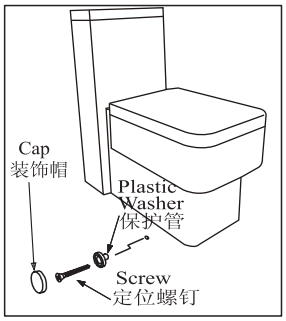

* Carefully align and lower the toilet so that the connector is firmly inserted into the waste pipe.
* Install plastic washer & screw tighten until snug and cover the cap.
* Connecting flexible hose between the nipple & the fill valve.

NOTICE: Do not use white cement or high lime content cements to install this toilet. The expansion of cement due to a rise in temperature may make the toilet crack or cause damage.

* 将座便器仔细对齐，缓慢放下，确保联结件牢固插入排污管。
* 安装保护管和固定螺钉，用力拧紧并盖上装饰帽。
* 连接供水软管到供水接头和进水阀上。

注意：切勿用使白水泥或高石灰含量的水泥来安装座便器，因为水泥受热膨胀可能会使座便器开裂或损坏。

2 FIXATION BOARD INSTALLATION

1) Before you install, please adjust the position between toilet and seat .
2) Put the fixation board on the installation hole of toilet seat ,Inlay the adjustment board ,then insert the screw.
3) Revolve the nut to fix the fixation board.

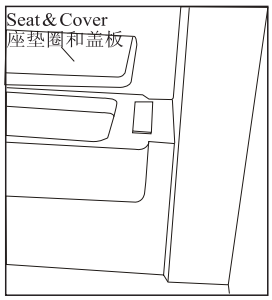

2,固定基座的安装

1)安装前，请先将座盖放在马桶上调整配合度，调整合适后将安装板固定在马桶上;
2)把固定板放到便座安装孔处,嵌入调节板,插入螺栓;
3)用螺丝刀拧紧螺栓，使固定板不会移动;

LIFELONG WARRANTY

VC PRODUCTS LIFELONG WARRANTY

VC Products are warranted to be free of manufacturing defects.
This product is lifelong warranted from date of purchase. We will be responsible for any problems caused by manufacturing defects provided with the invoice. We will, at its election, repair, replace or make appropriate adjustrnent where. We inspection discloses any such defects occurring in normal usage within one year after purchase.
Damages to the product caused by misuse, abuse and installation that is not in accordance with the owner s manual are not covered by this warranty.
To obtain quick warranty service, please contact your dealer, or Contact:
Kohler (Shanghai) International Trading Co., Ltd
(Original sales receipt must be provided as the proof of purchase.)
This is our exclusive written warranty.

终身担保

陶瓷产品终身担保

其陶瓷产品在制造工艺上无瑕疵。
本产品自购买之日起即获得本公司终身的质量保证。凭购货发票，本公司将免费承担由制造质量引起的任何问题。经核查后，本公司有权决定是修理、更换还是作适当的调整。
担保也不包括外观损伤、使用不当以及未按说明书安装的损失。
为获得快捷的担保服务，请联系您的销售商或联系：
上海科勒国际贸易有限公司
(请出示销售发票原件作为购货凭证)
这是我们全部的书面担保。

卡丽 KARAT

维修零件图 SERVICE PARTS PAGE
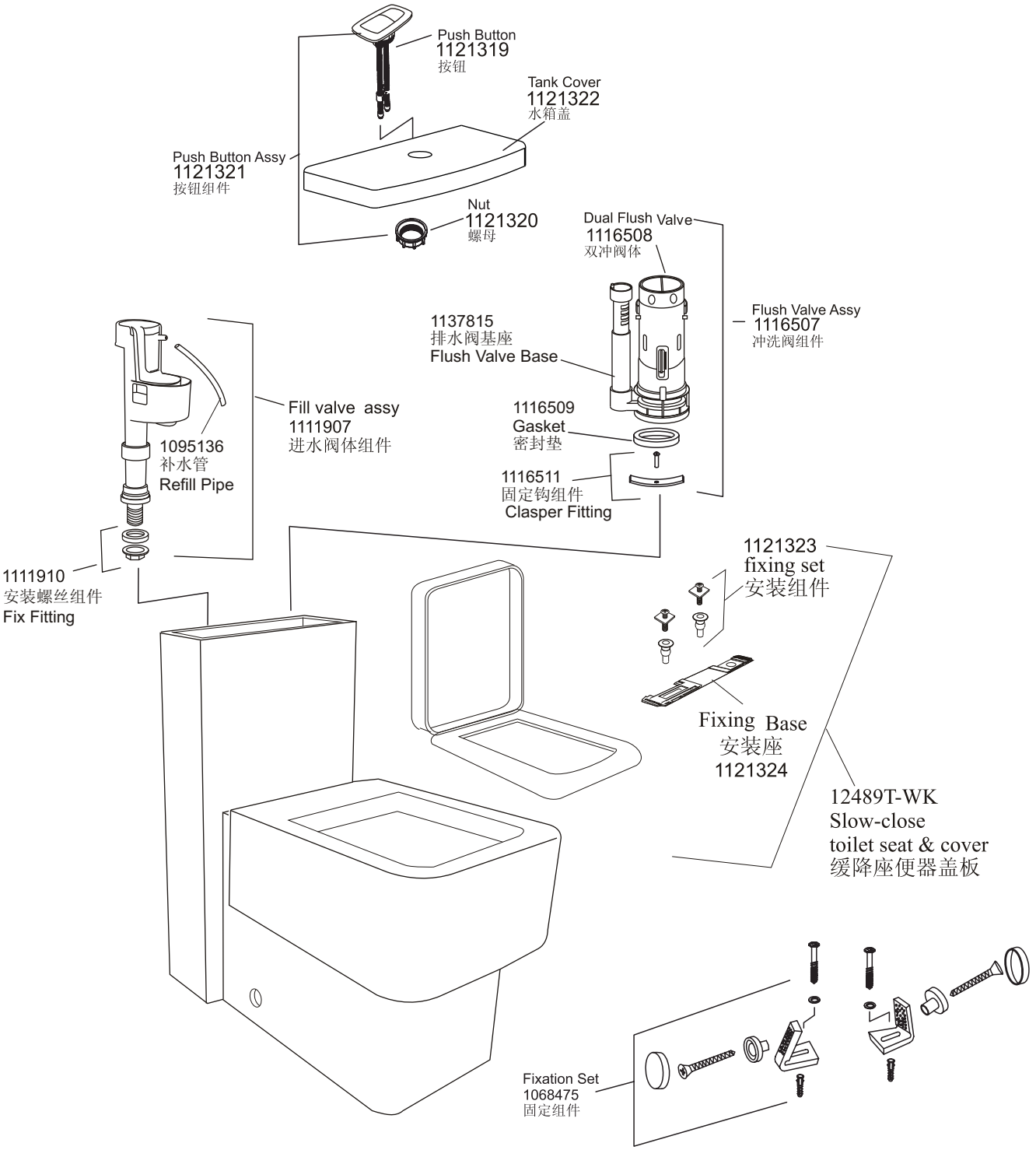
OPAL 3/6L ONE-PIECE TOILET 305MMRI
WITH SLOW-CLOSE SEAT & COVER
欧佩3/6升连体座便器305mm坑距
配缓降盖板
12483T-S-WK